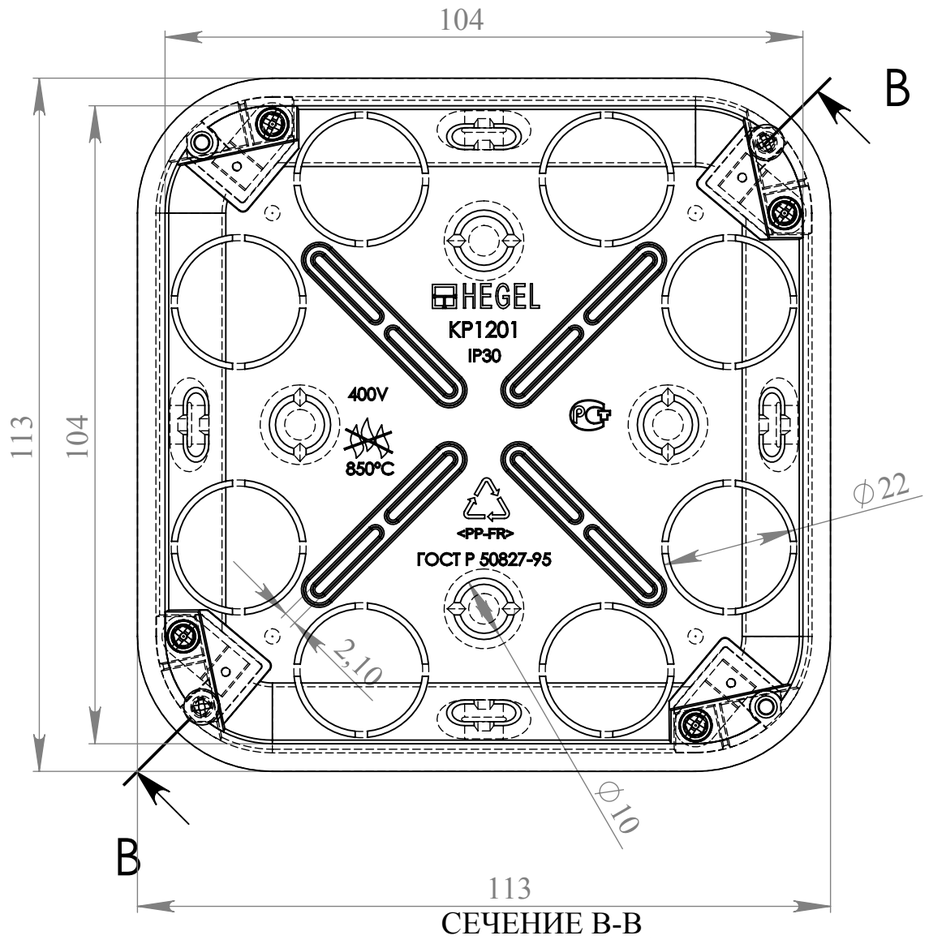

СЕЧЕНИЕ B-B
МАСШТАБ 1 : 1

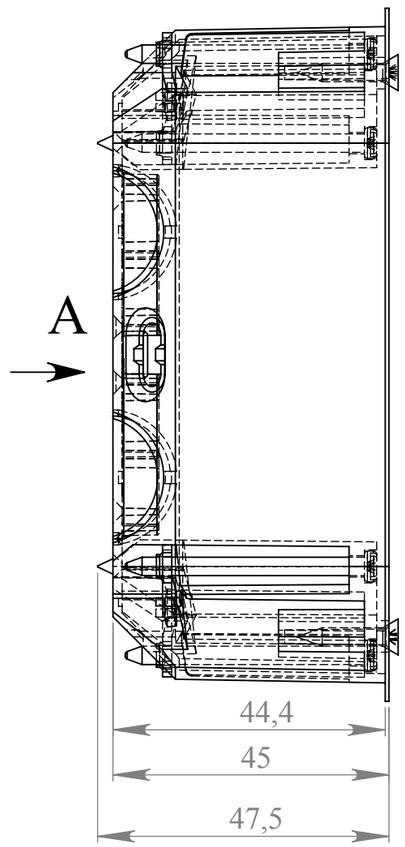

ВИД A
МАСШТАБ 1 : 1

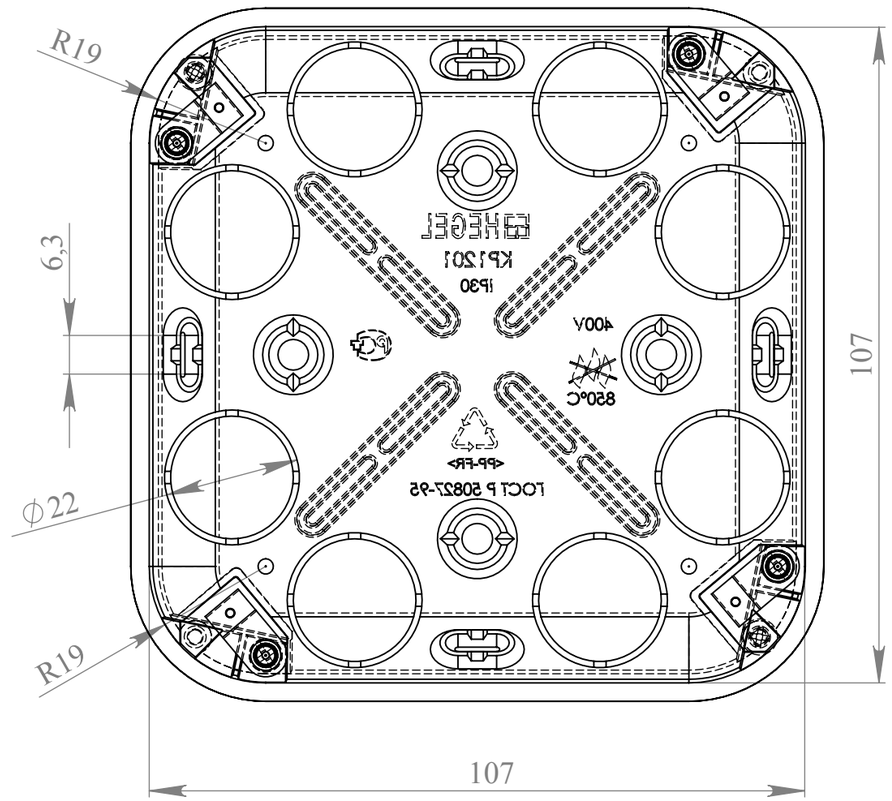

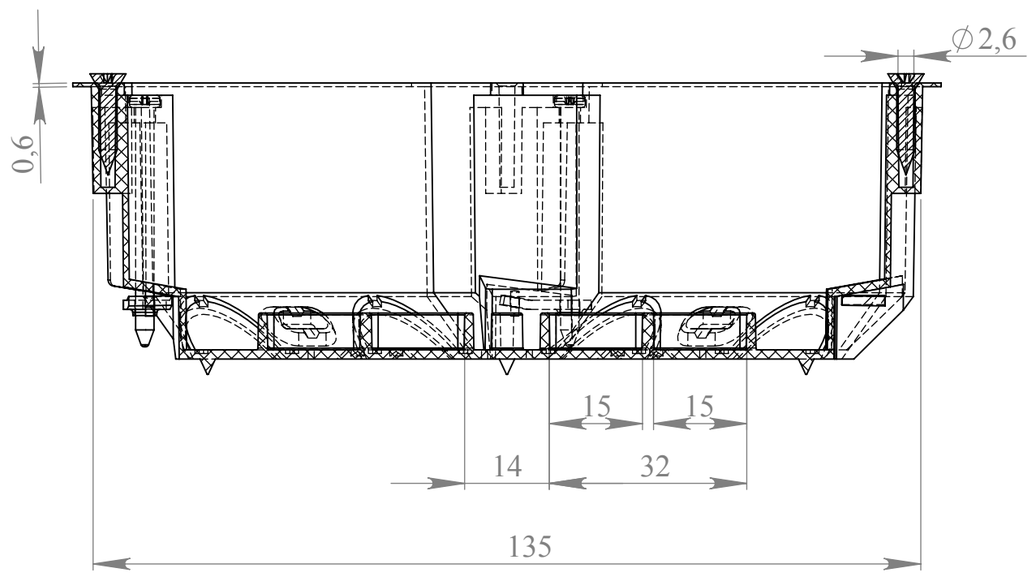

UNLESS OTHERWISE SPECIFIED: DIMENSIONS ARE IN MILLIMETERS SURFACE FINISH: TOLERANCES: LINEAR: ANGULAR:	FINISH:			DEBUR AND BREAK SHARP EDGES	DO NOT SCALE DRAWING	REVISION
	NAME	SIGNATURE	DATE		TITLE:	
DRAWN						
CHK'D						
APPV'D						
MFG						
Q.A				MATERIAL:	DWG NO. **KP1201**	A3
				WEIGHT:	SCALE:1:2	SHEET 1 OF 1