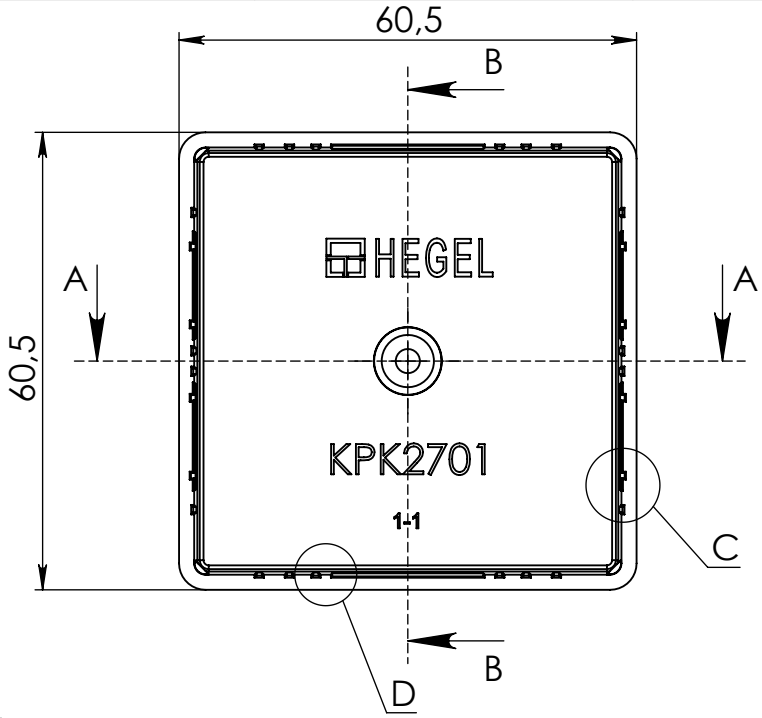

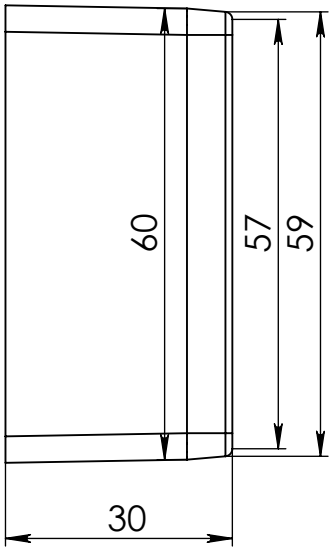

СЕЧЕНИЕ A-A

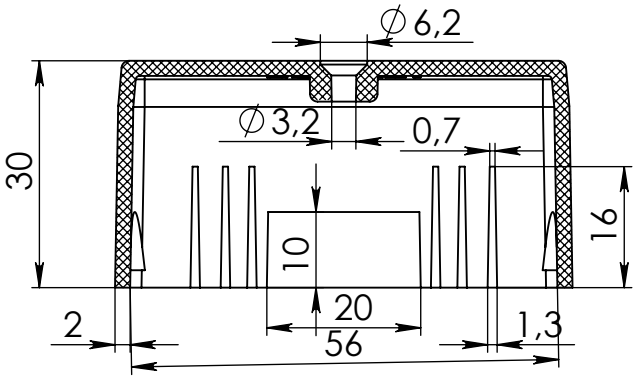

СЕЧЕНИЕ B-B

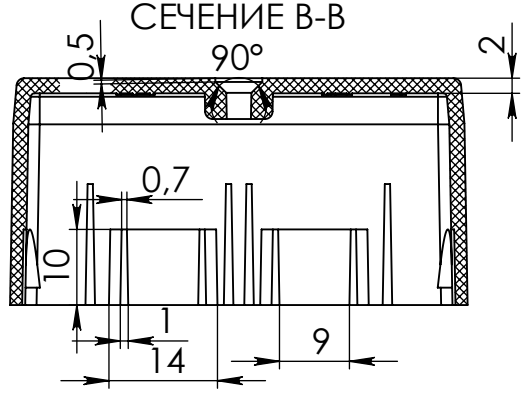

МЕСТНЫЙ
МАСШТАБ 5 : 1

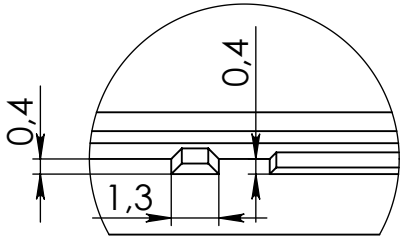

МЕСТНЫЙ
МАСШТАБ 5 : 1

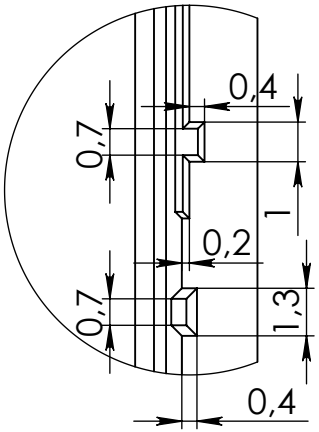

UNLESS OTHERWISE SPECIFIED: DIMENSIONS ARE IN MILLIMETERS SURFACE FINISH: TOLERANCES: LINEAR: ANGULAR:	FINISH:			DEBUR AND BREAK SHARP EDGES	DO NOT SCALE DRAWING	REVISION
	NAME	SIGNATURE	DATE		TITLE:	
DRAWN						
CHK'D						
APPV'D						
MFG						
Q.A				MATERIAL:	DWG NO. Крышка_KPK2701	A4
				WEIGHT:	SCALE:1:1	SHEET 1 OF 1